Appliance Data Sheet

Product Type	Electric Oven
Product Code	**UBO733MB**
	**Product Description** 60cm Multifunction 73L Airfry Oven 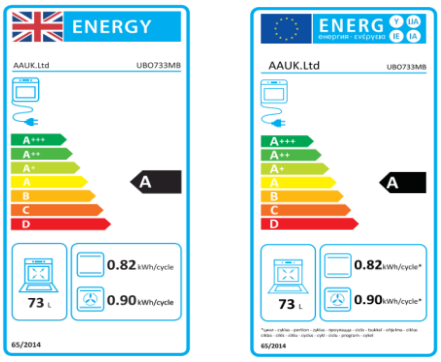

Features / Specification	
Barcode	8422248619295
Colour	Matt Black Glass (Tinted)
Net Oven Cavity	73L
Cooking Type	True Fan + Airfry
Control Type	Pop-Out Rotary Knobs
Timer	LED Touch Programmer
Display Colour	Red
Functions	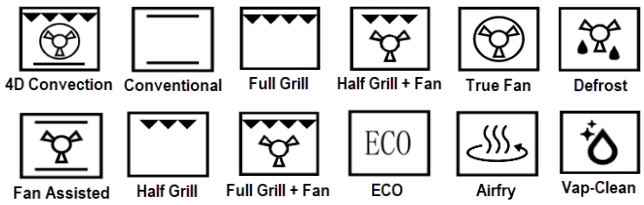
Oven Light	Yes
Self Cleaning	Vap-Clean (Basic Hydrolytic)
Oven Shelves	2
Airfry Tray	1
Oven Tray	1
Grill Trivet	1
Telescopic Runners	-

Dimensions & Technical Information

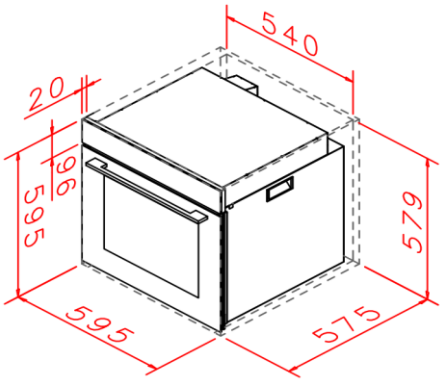

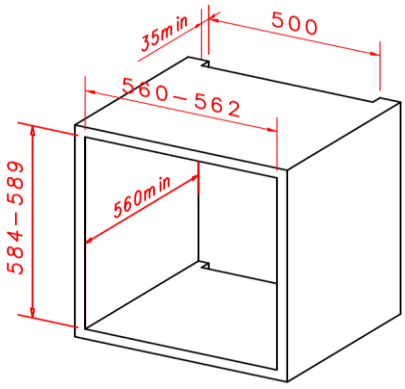

Product Dimensions (W x H x D)	595 x 595 x 575mm
Packed Dimensions (W x H x D)	625 x 665 x 655mm
Product Weight	35.5kg Packed / 33.0kg Unpacked
Power Supply	220-240V ~ 50/60Hz
Max Power	2800W
Cable / Plug	1.2m / UK
Supply Connection	13A